AVR7 Automatic Voltage Regulator

D1	1N5408	R1	2kΩ 10-turn	M1	MOV CNR 07D820K
D2	1N5408	R2	2kΩ 1/4W	C1	220µF 25V
D3	1N5408	R3	1kΩ 1/4W	C2	470µF 250V
D4	1N5408	R4	500Ω 1/4W	C3	C3
D5	1N4007	R5	400Ω 1/4W	C4	C4
D6	1N4007	R6	50kΩ 1/4W	Q1	MJ10012
D7	1N4007	R7	100kΩ 1W	Q2	MJ10012
D8	1N4007	R8	30kΩ 1/2W	Q3	S8050 TO-92
D9	D9	R9	10Ω 10W? sand	Q4	MPS-A42? TO-92
D10	1N5408	R10	30kΩ 1W	Q5	S8050 TO-92
D11	1N5408	R11	12kΩ 2W	Q6	T2142 TO-3PMLH
D12	1N4007				
D13	1N5408				
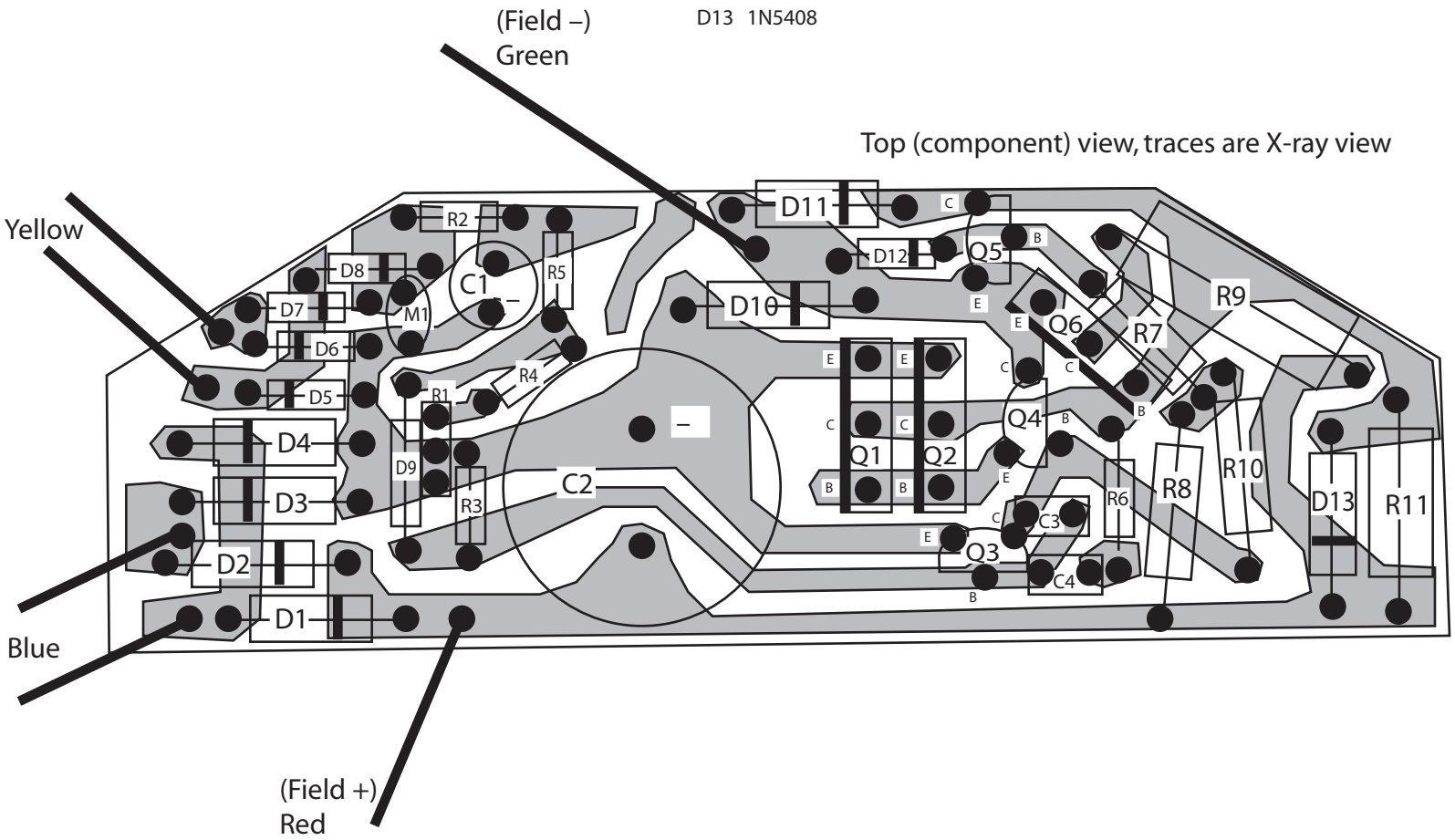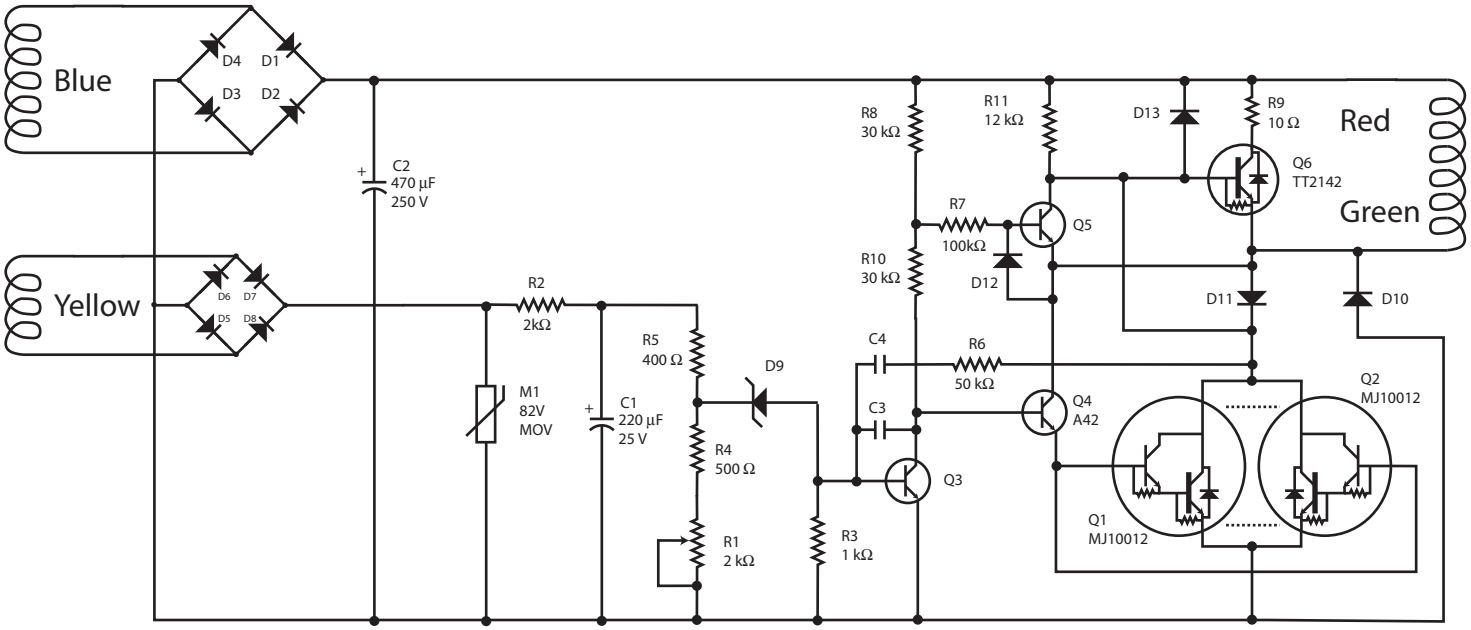
Top (component) view, traces are X-ray view